G-1 Particle Size Distribution Measurements

Airborne Twin Scanning Electrical Mobility Sizing System

- Simultaneously scanned NDMA & LDMA
- 25 size bins between 0.005 - 0.5um
- 60s time resolution
- Sample RH<15%, DMA RH<5%
- Fully automated DMA/sample flow control

Pulse Height Analysis UCPC

Ultrafine Condensation Particle Counter

Condensation Particle Counter

PMS PCASP-100

PMS FSSP-100

Isokinetic flow Particle Inlet System

Nano-Humidified Tandem Differential Mobility Analysis (NHTDMA)

Objective 1: Laboratory measurements of size-resolved water uptake by nanoparticles (3-15nm).

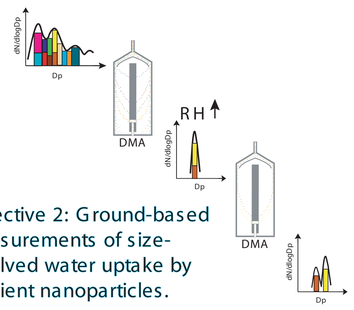

Objective 2: Ground-based measurements of size-resolved water uptake by ambient nanoparticles.

Question:
How does the deliquescence RH change with decreasing particle diameter? σ(r)? surface?

Rapid Measurements of Composition and Hygroscopicity of Individual Particles (RAMCHIP)

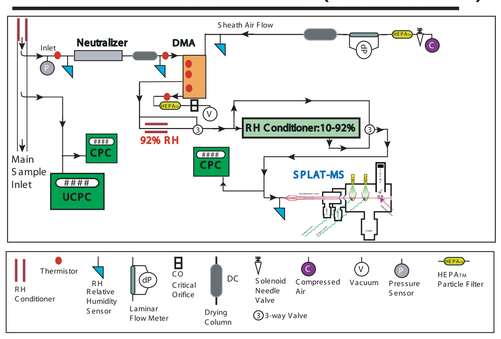

Objectives:

- Provide composition information on monodisperse particles that exhibit different hygroscopic growth
- Examine RH, particle size, and particle composition dependency of hysteresis curve
- Deploy system at Dheju Island during ACE-Asia

Rapid Measurements of Composition and Hygroscopicity of Individual Particles (RAMCHIP)

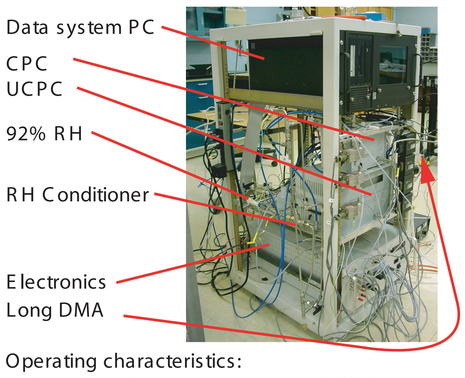

Operating characteristics:

- SPLAT-MS composition+size: 0.07-3μm
- Conditioner RH is scanned
- Takes advantage of multiply charged particles
- Precise RH control unnecessary
- Automated control of all air flow rates
- Does not require scanning a second DMA

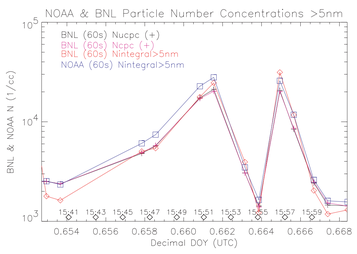

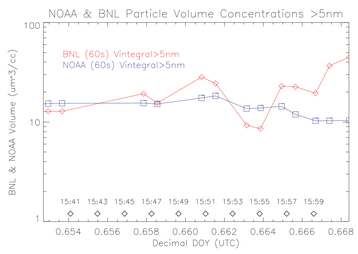

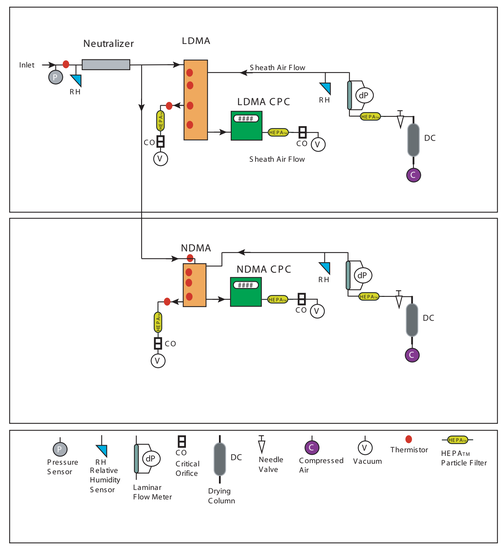

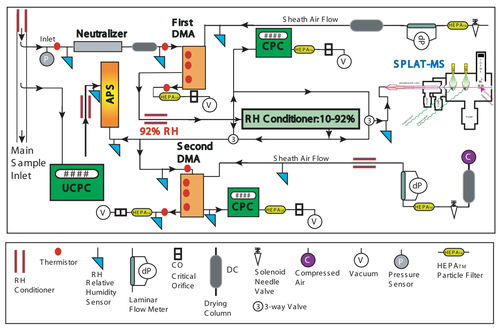

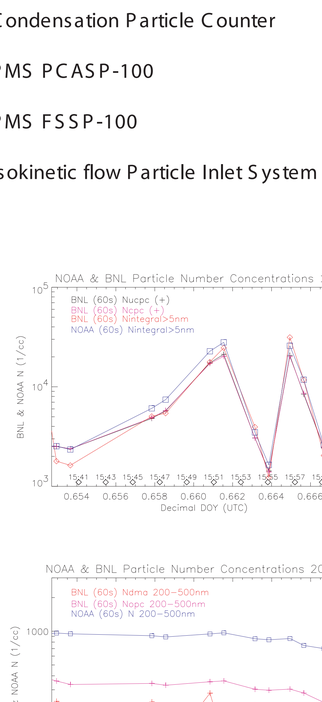

Future Development Plans for Airborne Particle Size Distribution Measurements

Airborne Twin Scanning Electrical Mobility Sizing System

- Replace TSI CPCs with new Mixing CPCs
- Improve time resolution from 60s to 3s
- DMA/sample flow control every 1s
- Integrate OPC/APS with TSEMS
- Aircraft particle inlet improvements:
  - Laboratory intercomparison DMA-PCASP
  - Examine diffuser cone losses
  - Re-design for laminar flow
  - Dedicated isokinetic flow control
  - Isokinetic 'sub-sample' ports for future chemistry measurements

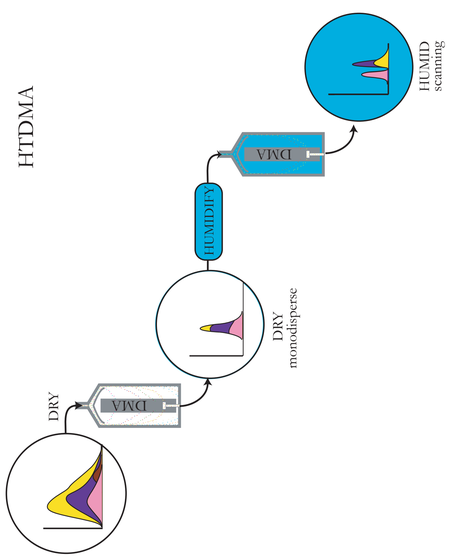

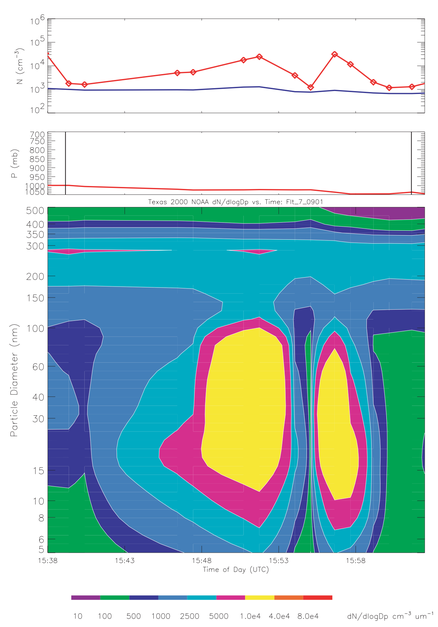

NOAA NMASS 60sec avg data just intercomparison period

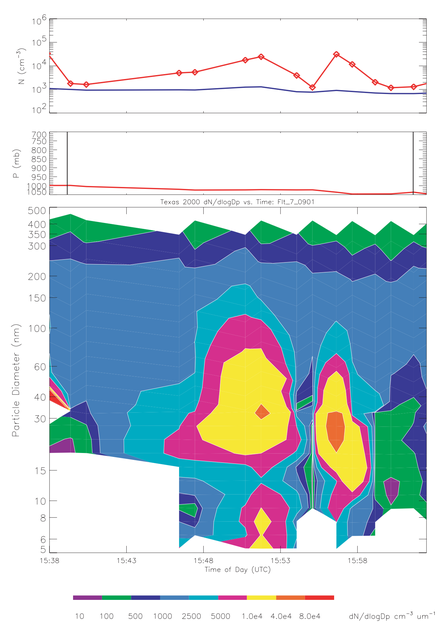

BNL TSEMS 60sec scan data w/ calc'd flows just intercomparison period